USER MANUAL

Doughty Easy Grip & Side Entry Clamps

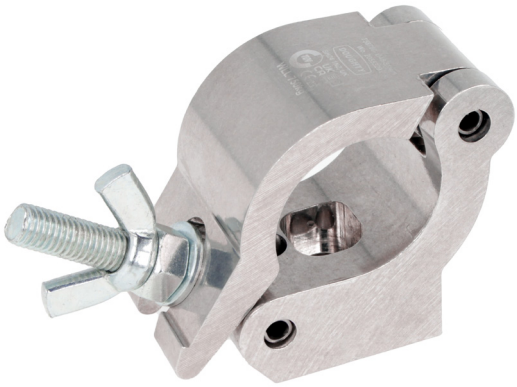

Part No's:

T57120
T57121
T58780
T58781
T58782
T58783

Original Instructions

Rated Load with a Safety Factor of 8:1 WLL1 DGUV/BGV C1 for Lifting Load

Rated Load with a Safety Factor of 4:1 WLL2 2006/42/ES for Static Load

Part No.	Tube Diameter	Description	Finish	Accessory	WLL[1] (Kg) Lifting	WLL[2] (Kg) Static
T57120	Ø48-51mm	Easy Grip Doughty Clamp	Polished	Easy Grip Handle	375Kg	750Kg
T57121	Ø48-51mm	Easy Grip Doughty Clamp	Black	Easy Grip Handle	375Kg	750Kg
T58780	Ø48-51mm	Doughty Side Entry Clamp 50mm	Polished	None	375Kg	750Kg
T58782	Ø48-51mm	Doughty Side Entry Clamp 50mm	Black	None	375Kg	750Kg
T58781	Ø48-51mm	Doughty Slimline Side Entry Clamp 30mm	Polished	None	250Kg	500Kg
T58783	Ø48-51mm	Doughty Slimline Side Entry Clamp 30mm	Black	None	250Kg	500Kg

The Doughty Clamp range consists of various clamps used to lift loads or make structural connections. Clamps are used in the entertainment market. They can be used for permanent support structures in places of entertainment such as museums, event venues, theatres etc.

Lifting loads is inherently dangerous so Doughty Clamps are strictly for professional use only. Only competent persons are permitted to install and use Doughty Clamps. A competent person in this respect is an individual with relevant technical education, training and/or experience enabling him or her to perceive risks and to avoid hazards occurring during use of a product.

The load capacity differs depending on the model and the safety factor required. Clamps are suitable to fit steel and aluminium tubes of diameters ranging from 48mm to 51mm depending on the model. Clamps are marked with the working load limit corresponding to the 8:1 safety factor in order to meet the German standard for overhead lifting.

Most Clamps are available in Silver (polished aluminium) or black powder coating. Special attention has been taken to safety. Therefore the TUV test certificates indicate multiple working loads. Depending on the application or local applicable legislation max working load can be chosen.

Clamps can be judged as a lifting accessories under the EU machine Directive 2006/42/EC as well as German DGUV17 for lifting and holding loads above persons. They can also be used as a joining part in constructions.

All communications will be carefully considered for future printings of this manual and changes to our products. Some models of clamps are composed of different elements each with an individual Working Load. The lowest of the working loads determines the overall strength and thus shall be used as max working Load for the application.

When Doughty Clamps form part of a lifting machine or lifting system, the lifting machine or system shall be tested and marked with its WLL and appropriate certification issued. The resulting forces in the structure attached shall be verified before applying a load.

Warning

Check local legislation for the application of use and adapt the use where ever necessary.

The intended use of Clamps is to be used as a lifting accessory to hang loads or create a connection between structural elements. Loads can be, but not limited to, lighting fixtures, video projectors, sound systems and stage sets. Structural elements can be pipes, trusses, tubular frame works or lifting brackets.

Any use other than that mentioned is considered to be a case of misuse. The user/operator and not the manufacturer shall be liable for any damage or injury resulting from such cases of misuse. The use of Clamps for scaffolding purposes under EN74 is explicitly excluded from the intended use.

Limitations of use

- The Clamps can be operated in -20° Celsius up to +60° Celsius.
- When used permanently outdoors it is advised to use the versions with stainless steel hardware in order to avoid galvanic corrosion.
- For salt water environments, please use our All Weather Clamp range.
- Doughty Clamps shall only be used on steel or aluminium tubes or bars.
- When Doughty Clamps are used as part of an outdoor lifting system special factors such as ground condition and profile, wind loading, water accumulation on temporary structures and other criteria shall also be taken into account.
- When Clamps are used to secure equipment which is moved or suspended over areas where persons are present an M12 self-locking nut shall replace the standard nut and wingnut.
- The use of Clamps is the sole responsibility of the user.
- To use the Clamps the user must also observe the safety regulation, the assembly and disassembly instructions to be found in this manual.
- All persons who use and service this device have to be acquainted with this manual and must be informed about its potential hazards.
- It is also imperative to observe the local accident prevention regulations and/or occupational health and safety regulations.
- Care must be taken when used in conjuction with thin wall truss.
- The manufacturer is not liable for indirect consequential damage and financial loss. The manufacturer shall not be liable for any changes made to the device nor for any damage resulting from such changes.

TYPICAL EASY GRIP DOUGHTY CLAMP

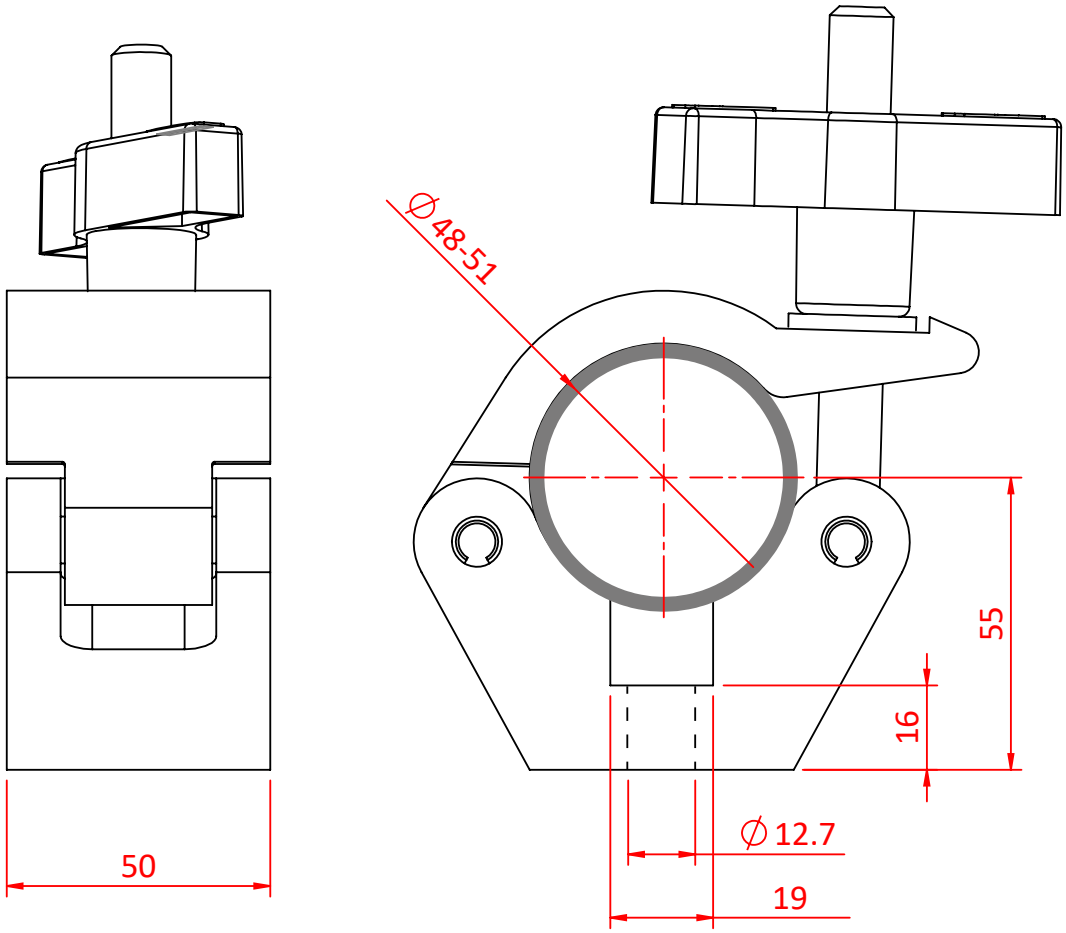

TYPICAL DOUGHTY SIDE ENTRY CLAMP - 50MM

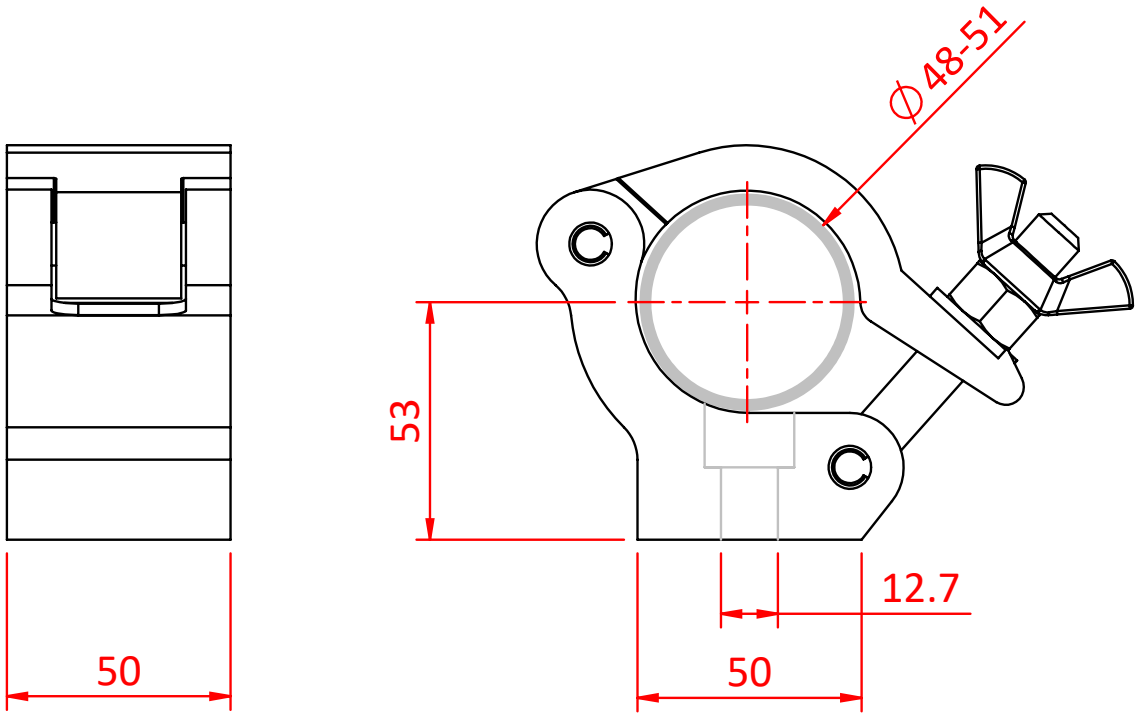

TYPICAL SLIMLINE DOUGHTY SIDE ENTRY CLAMP - 30MM

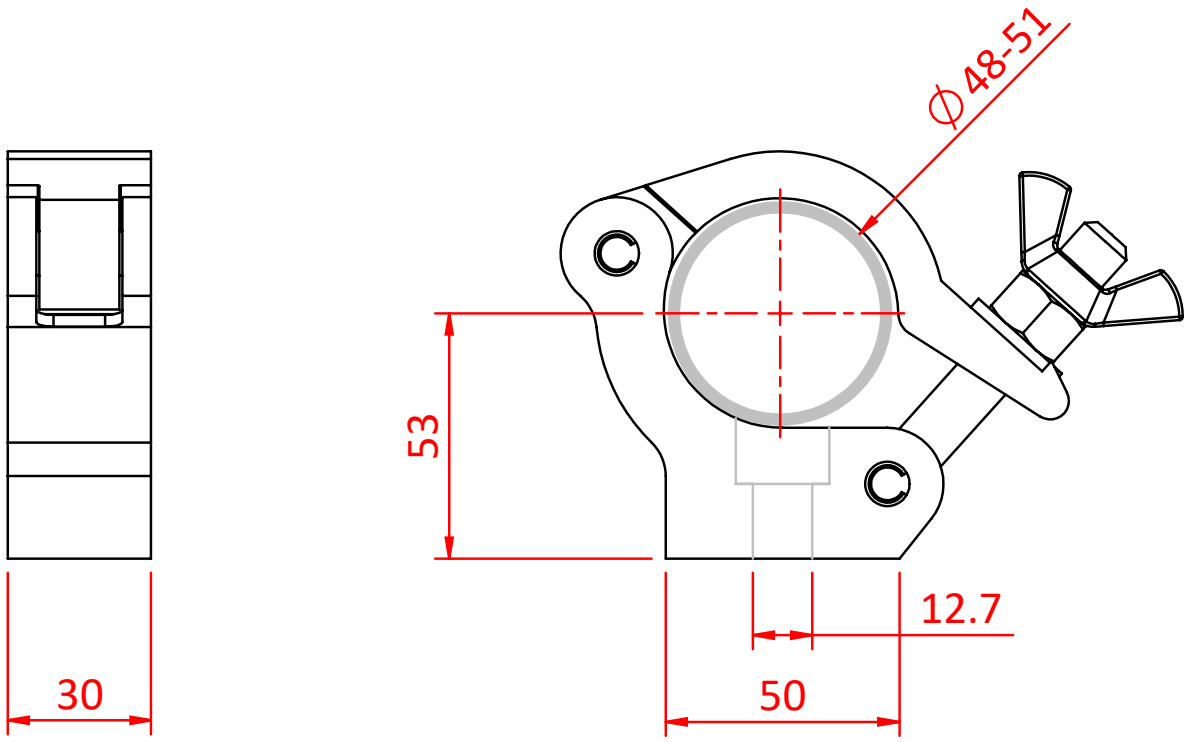

TYPICAL DOUGHTY CLAMP LABEL

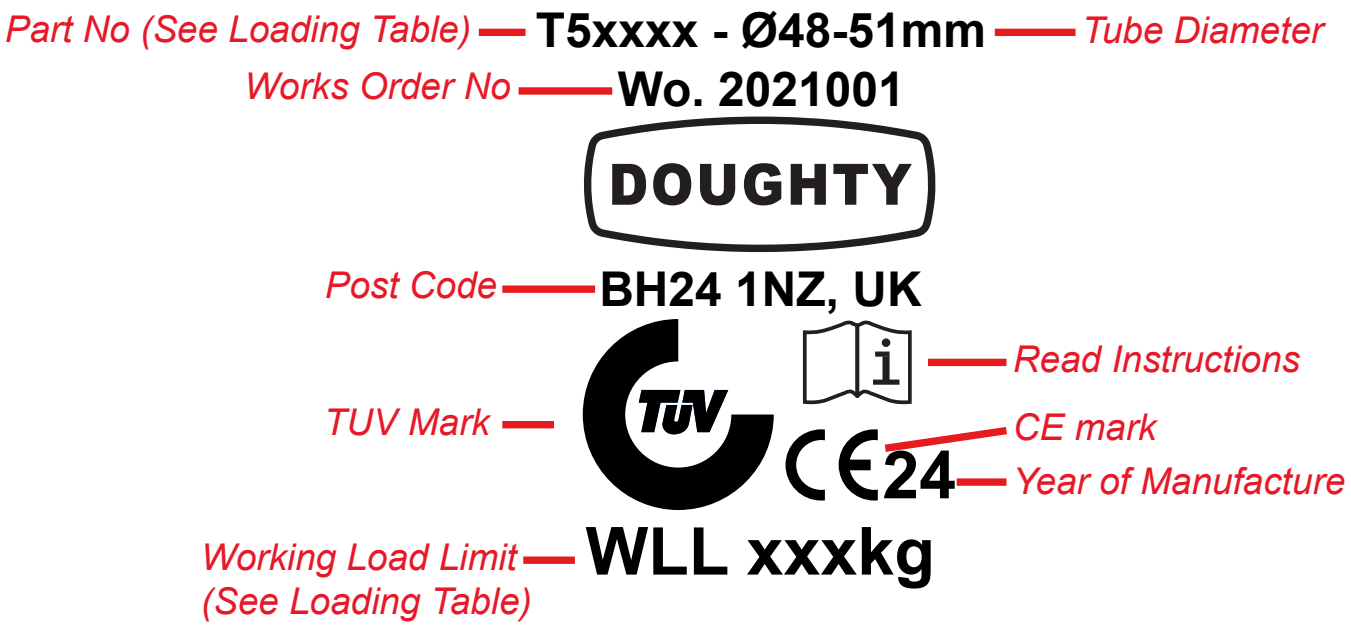

The following modifications are allowed to be executed by third parties:

Painting:

- To paint a clamp, cover all bolts and nut with tape.
- Use blasting to roughen the surface and to degrease the clamp.
- Use a wet-paint or powder coating paint system to colour the part.

Safety Instructions:

For heath and safety reasons people assembling, disassembling, transporting, maintaining and cleaning Clamps should wear adequate Personal Protection Equipment such as, but not limited to: gloves, hard hats and safety shoes. In line with the use of PPE organisational measures may need to be implemented to keep the area beneath installations clear of personnel.

- Clamps shall be solely used for the range of pipe diameters as stated on the Clamps.
- Do not exceed the working load limit engraved on the Clamps.
- Make sure the resulting forces on the supporting structure are approved by a competent person.
- All loads imposed shall be considered. E.g. dynamic forces caused by the lifting machinery.
- Nuts and bolts shall be tightened by means of a tool in such a manner they cannot be released by man power.
- When loads are using electrical power, equip-potential bonding shall be put in place.
- Clamps shall be inspected by a competent person as often as required but with a minimum of once a year.
- Inspect equipment before every use. Damaged Clamps shall be taken out of service.
- Maintenance and repairs can be undertaken only by authorised personnel. If in any doubt contact the manufacturer.
- Do not throw Clamps.

Warning

The working load engraved on the clamp is solely for a straight pull between the supporting pipe and connectionpoint on the clamp.

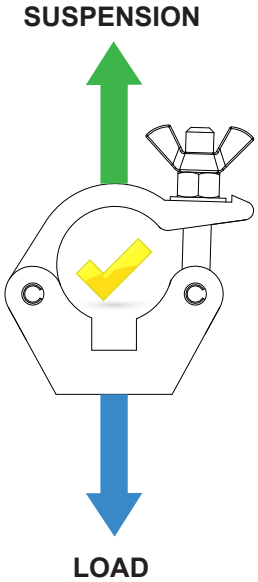

Warning

The methods of suspension that are shown below creates torsional forces, influencing the stabillity of the supporting structure and lowers the working load of the clamp. This needs to be checked by a competent person.

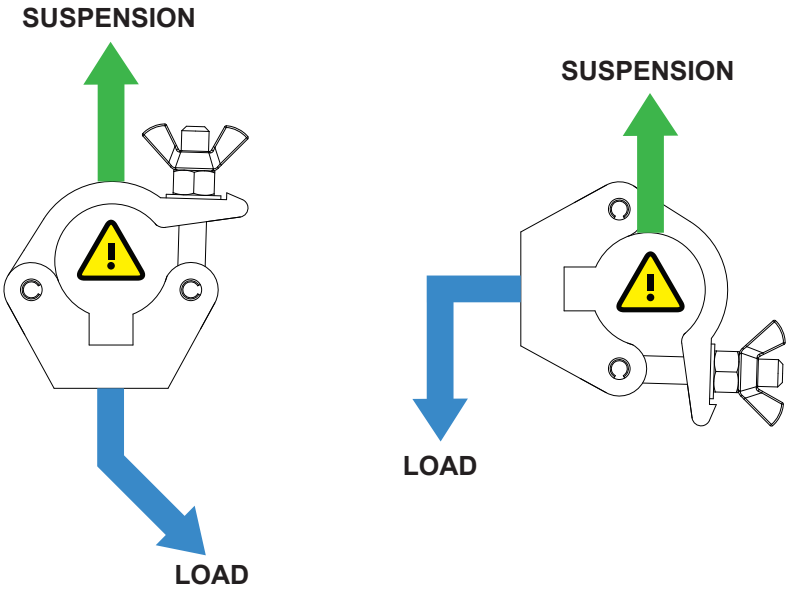

Warning

Using clamps where the direction of the load is parallel to the tube depends on, but not limited to, contact surface, material, friction resistance and the applied torque to the clamps wingnut/nut. This type of application significantly reduces the stated WLL and should be used with extreme caution.

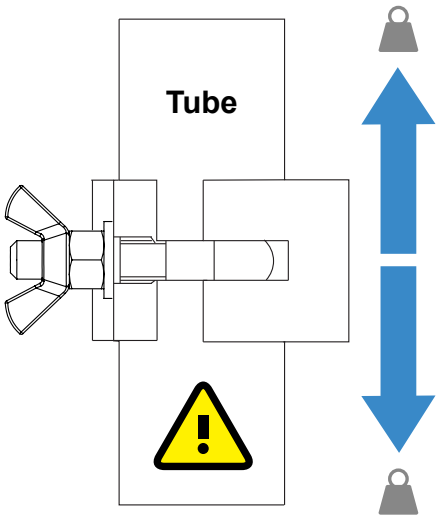

Warning

Do not use fixings that, when tightened, will contact the tube or barrel on which the clamp is fixed, as highlighted below.

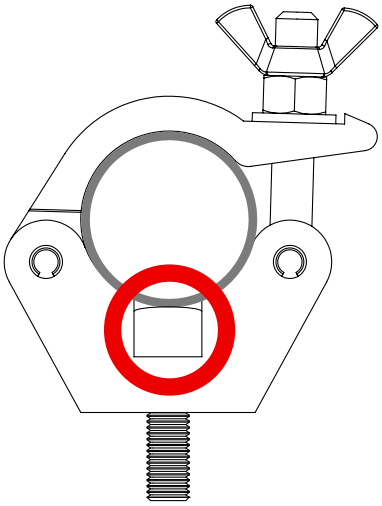

CLAMPS USED AS A LIFTING ACCESSORY:

2006/42/EC - Machinery Directive.

DGUV Rules 115-002 - Regulations for stages and studios (Formerly known as BGVc1)

DGUV Information 215-313 - Safety at productions and events for television, radio, film, theatre, exhibitions: Loads above persons (Formerly known as BGI 810-3)

BS7906-1:2005 - Lifting equipment for performance broadcast and similar applications. Part 1 specifications for the design and manufacture of above stage equipment.

TRANSPORT AND STORAGE

- Due to the relatively high self-weight it is advised to keep storage bins as small as possible in such a manner they can be lifted by one person. Local legislation for maximum load to be lifted by persons shall be adhered to.
- Before Clamps are put into storage they shall be checked for defects. Defective Clamps shall be clearly marked and put aside is such a way they cannot be re-used.
- Put the lid and eye bolt together and hand tighten. This way bolts will not get lost during transport.
- Ensure the product is stored and kept in a dry, ventilated environment to avoid corrosion.
- Do not store Aluminium Clamps in steel bins.
- Use appropriate packaging to prevent damage to parts and threads when transporting Clamps.

Doughty Clamps are used to suspend or make structural connections between truss or barrel and a variety of objects using an M12 fixing. To install, attach the clamps to a barrel or truss following the intructions below:

1. Open the lid of the clamp.
2. Fold the eye bolt and lid aside.
3. Hang the clamp in the desired position. Tighten the bolt before the load is fully supported
4. Tighten the wingnut/nut/bolt using tools only. Do not apply a torque greater than 30Nm/22lbft.
5. Use a secondary safety if legislation requires.

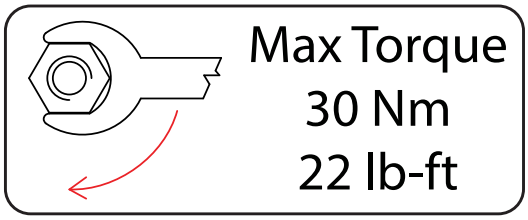

Warning

Over tightening the nut or bolt might lead to permanent deformation of the tubes to which they are attached.

COMMISSIONING

- Clamps are not intended to serve as a means to secure electrical bonding and any fixtures must be grounded in accordance with accepted electrical practices.
- Do not use Clamps in the immediate vicinity of pyrotechnics.
- If used in an outdoor environment, the support structure must be fitted with earth protection against lightning.
- Before applying a load check that all connections are properly made.
- Before lifting check that all connections are still correct.
- Check if all parts are in good order.

DISASSEMBLY INSTRUCTIONS

- Take the weight off the Clamps.
- Release the nut and fold the eye bolt aside.
- Open the lid and fold aside.
- Remove the load.
- Check if the Clamps are in good order.
- If not, mark them clearly and put aside.

Table 1	Inspection Level			Items to be Inspected					
	Initial	Regular	Periodic	Lid	Body	Eyebolt	Nut	Roll Pin	ID
Missing Parts	Y	Y	Y						Y
Holes	Y	Y	Y	Y	Y				
Abrasion	Y	Y	Y	Y	Y			Y	
Corrosion			Y	Y	Y	Y	Y	Y	
Deformation	Y	Y	Y	Y	Y	Y	Y	Y	
Excessive Wear		Y	Y		Y	Y	Y	Y	
Cracks	Y	Y	Y	Y	Y	Y	Y	Y	

INITIAL INSPECTIONS - When first acquired, whether they are new or used, Clamps should be inspected in accordance with Table 1 and a record of the inspection maintained.

REGULAR INSPECTIONS - Regular visual inspections should be carried out in accordance with Table 1. Regular inspections should be performed by a competent person and should be carried out prior to each incident of use.

PERIODIC INSPECTIONS - Periodic visual inspections should be carried out in accordance with Table 1 and a record of the inspections maintained. Periodic inspections should be performed by a competent person and should be conducted at least once each year or in accordance with an inspection routine established by a qualified person. Clamps which are subject to any accident must be inspected according to the requirements per periodic inspection and in accordance with Table 1.

INSPECTION FREQUENCY

CLAMPS IN REGULAR SERVICE - Clamps in regular service should be subjected to regular and periodic inspections.

PERMANENT INSTALLATIONS, STATIONARY - Periodic inspections should be carried out on all Clamps that are permanently installed in a stationary (not moving) configuration. The frequency of inspections should be determined on the basis of the prevalent conditions.

PERMANENT INSTALLATIONS, MOVING - Periodic inspections should be carried out every three months, or in accordance with an inspection routine established by a qualified person, on all Clamps that are installed in a permanent configuration where movement of the truss system is an integral part of use.

RECORDS - Records of initial inspections and periodic inspections should be kept by the owner for each Clamp and should be signed and dated by the person carrying out the inspections.

Safety Instructions

Although under normal use and environmental circumstances, Clamps need little maintenance, for safety reasons, all parts must be checked regularly for damage, cracks and corrosion.

NOTICE

Doughty Clamps shall be checked in compliance with the local law by a competent person. Checking shall take place as often as required but at a minimum of once a year. If in doubt contact the manufacturer.

- Approved personnel must carry out a visual and functional test before every useage.
- Check all components for damage and corrosion. Damaged and corroded parts shall be exchanged with like for like approved replacement parts.
- Burrs and sharp edges shall be removed using fine sandpaper or a file. DO NOT use any mechanical abrasive machine to remove sharp edges from the Clamps.
- Maintenance and repairs must only be carried out by a competent person. If in doubt, contact the manufacturer.
- Only use hot water and soap to remove dirt from Doughty Clamps – DO NOT use abrasive fluids.
- Do not re-zinc plate steel parts.
- Approved personnel must carry out more detailed inspection and testing of the product on a regular basis depending on the usage of the product.
- Written records should be kept from the date the product was put into operation.

Warning

- The installer/operator must read and understand the User Manual before using the equipment.
- Operators shall be adequately instructed and fully understand the safe use of the equipment before use.
- Failure to carry out maintenance as necessary, including the replacement of parts to the correct standard could render this equipment unsafe and the manufacturer cannot accept any responsibility in this respect.
- DO NOT modify the equipment as this could lead to a critical failure.
- DO NOT use this equipment for a purpose that it is not intended. This could lead to a failure of the equipment and a risk of falling objects.

The following faults could be an indication of overload or misuse. Remove those clamps from service.

- Deformation of the lid (see diagram).
- Nuts which cannot be turned by hand.
- Eyebolts which do not swivel properly.
- Lids which do not swivel properly.
- Clamp does not fit around the pipe.

Typical Deformation Examples

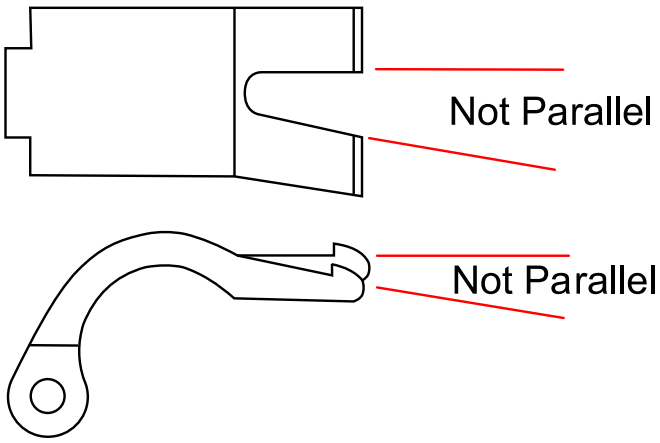

REPAIRS AND REPLACEMENT OF PARTS

If the Doughty Clamp is damaged, contact the manufacturer.

DISPOSAL

Products that are no longer needed can be scrapped. Preferably remove all steel parts, store part separately before offering them to a scrapping company. The following alloys are used:

- Aluminium ENAW 6082
- Steel 8.8
- Stainless 304

WARRANTY

- For a period of 12 months we undertake to repair, free of charge any damage attributable to faulty materials or workmanship, provided that the appliance is forwarded, freight paid, to our works or one of the Doughty appointed service agents.

- The guarantee-period begins on the day of the delivery, proven by a purchase receipt like an invoice or delivery note or their copies.

- The guarantee is only applicable to new equipment.

- The guarantee does not cover damage due to transport damage, negligent handling, overload or parts subject to normal wear and tear, nor damages that originate from a case of misuse because of non-observance the instructions in this manual.

- The fitting of non-original replacement parts or modifications of design by third parties invalidates the guarantee.

- Guarantee repairs do not renew nor extend the guarantee-period.

- In case of a claim under the guarantee or spare part requirements please contact your Doughty service agent.

- The manufacturer is not liable for indirect consequential damage or financial loss.

- The manufacturer is not liable for any changes made to the clamp or for any damage resulting from such changes.

Product Data Sheet

Doughty Easy Grip Coupler

A standard half coupler fitted with an Easy Grip Handle Slotted to hold captive an M12 Nut or Bolt	
Part Nos	T57120 - Polished T57121 - Powder Painted Satin Black
Tube Diameter	Ø48 - 51mm
Materials	Main Body - AW6082 T6 Aluminium Roll Pins - Stainless Steel Eyebolt Assy - Grade 8.8
Max Tightening Torque	Hand Tight Only
Fixings	To be used with M12 Fixings
WLL	750Kg
Weight	0.63Kg
Factor of Safety	5:1
Approval	TÜV Approved

Dimensions in mm

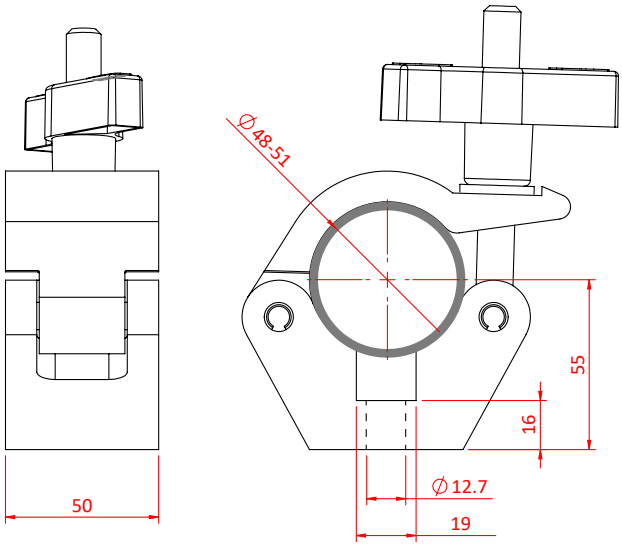

Doughty Engineering Ltd - Crow Arch Lane, Ringwood, Hampshire, BH24 1NZ, UK
+44 (0) 1425 478961, sales@doughty-engineering.co.uk - www.doughty-engineering.co.uk

DOUGHTY

Product Data Sheet

Side Entry Clamps

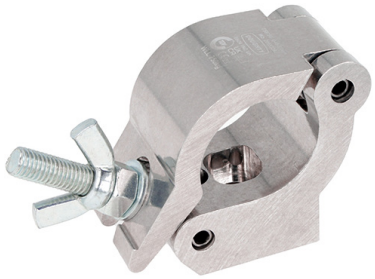

A 50mm Half Coupler designed with side entry. Ideal for cross bracing of if height above the barrel is limited	
Part Nos	T58780 - Polished T58782 - Powder Painted Satin Black
Tube Diameter	Ø48 - 51mm
Materials	Main Body - AW6082 T6 Aluminium Roll Pins - Stainless Steel Eyebolt Assy - Grade 8.8
Max Tightening Torque	30Nm
Fixings	M12
WLL	750Kg
Weight	0.54Kg
Factor of Safety	5:1
Approval	TÜV Approved

Dimensions in mm

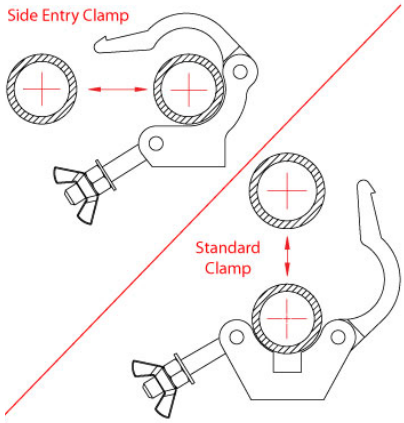

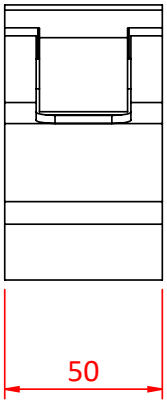

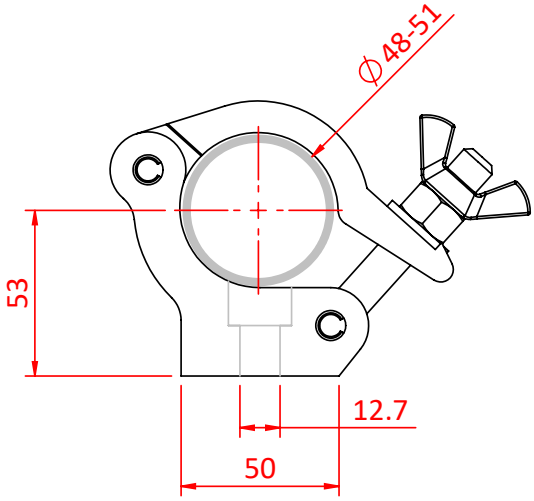

Doughty Engineering Ltd - Crow Arch Lane, Ringwood, Hampshire, BH24 1NZ, UK
+44 (0) 1425 478961, sales@doughty-engineering.co.uk - www.doughty-engineering.co.uk

DOUGHTY

Product Data Sheet

Slimline Side Entry Clamps

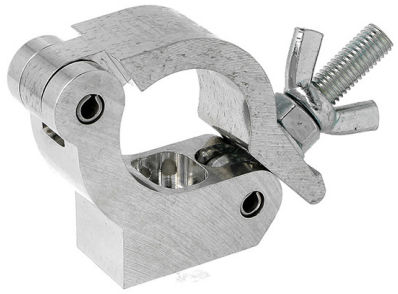

A 30mm Half Coupler designed with side entry. Ideal for cross bracing of if height above the barrel is limited	
Part Nos	T58781 - Polished T58783 - Powder Painted Satin Black
Tube Diameter	Ø48 - 51mm
Materials	Main Body - AW6082 T6 Aluminium Roll Pins - Stainless Steel Eyebolt Assy - Grade 8.8
Max Tightening Torque	30Nm
Fixings	M12
WLL	500Kg
Weight	0.36Kg
Factor of Safety	5:1
Approval	TÜV Approved

Dimensions in mm

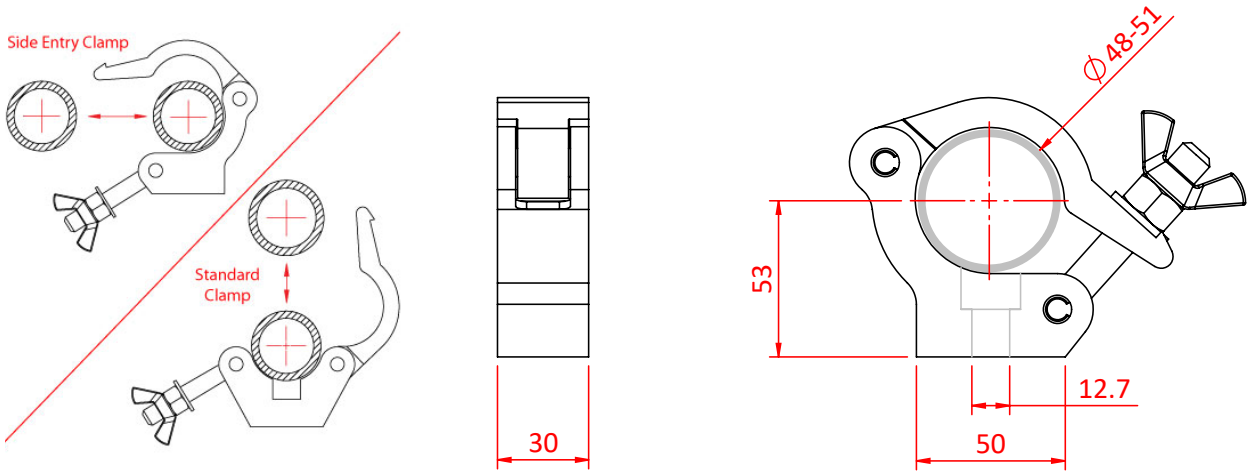

Doughty Engineering Ltd - Crow Arch Lane, Ringwood, Hampshire, BH24 1NZ, UK
+44 (0) 1425 478961, sales@doughty-engineering.co.uk - www.doughty-engineering.co.uk

ITEM	FAULT	REPAIR	DATE	SIGNATURE

DOUGHTY Engineering Ltd

EC-DECLARATION OF CONFORMITY

According to the Machinery Directive 2006/42/EEC Annex II

Doughty Engineering Ltd
Crow Arch Lane
Ringwood
Hampshire
BH24 1NZ

Herewith declares that:

T57120, T57121, T58780, T58781, T58782 & T58783

Doughty Easy Grip and Side Entry Clamps

Are in compliance with the following harmonized standards/standards/regulations.

Machinery Directive 2006/42/EEC annex II

- Machinery Directive 2006/42/EC;
- BS EN 12100:2010 – Safety of Machinery – General Principles for Design – Risk Assessment and Risk Reduction.
- BS 7906-1:2005 - Lifting Equipment for Performance, Broadcast and Similar Applications;
- DGUV 17 – Regulations for Stages and Studios
- DGUV Information 215-313

Signed for and behalf of **Doughty Engineering Ltd**

Name **Dan Phillips**

Position **Company Director** being the person responsible appointed by the manufacturer.

Company Registration No. London 972614
Registered Office: Crow Arch Lane, Ringwood, Hants, BH24 1NZ
Directors: J.C.G. Chiverton. S.C. Wright. D. Phillips. D.M. Chorley

Doughty Engineering Ltd
Crow Arch Lane
Ringwood
Hampshire
BH24 1NZ
Telephone: +44 (0) 1425 478961
Email: sales@doughty-engineering.co.uk
Website: www.doughty-engineering.co.uk

Note: Whilst every effort has been made to ensure that the information contained within this manual is correct, Doughty Engineering does not accept any liability for errors or omissions. Specifications and technical data are intended for guidance purposes only and may vary.